Reference: D01162

LUXO100S D01162

Diameter (mm)	200mm
System power (W)	15W
Luminous flow (lm)	1500lm
Voltage	110-277Vac
Degree of protection	IP44
Luminaire life (h)	50'000H
Driver lifetime (h)	50'000H
Beam angle	85°
Finishing	White
Light source	SMD2835
UGR	19
IK resistance	IK08
MacAdam	4
Fixation	Suspendu
Driver output amperage	160mA-1100mA
Driver output voltage	24-42V
Protection class	Class II
Warranty	5 years
Color temperature	5000K
Light regulation	On-off
Operating temperature	-20℃ ~40℃

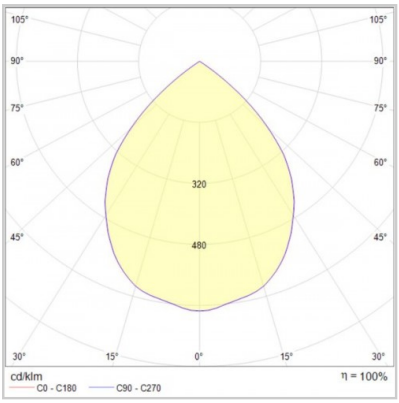

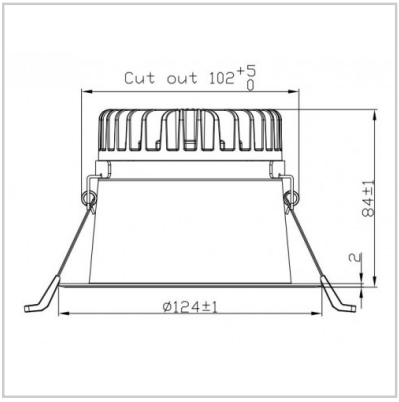

Sous réserve de modifications techniques car nos produits sont constamment améliorés.
We reserve the right to make technical changes as our products are constantly being improved.
Wir behalten uns das Recht vor, technische Änderungen vorzunehmen, da unsere Produkte ständig verbessert werden.

Smart Lux | Rue du Cardinal-Journet 25, 1217 Meyrin | +41 22 800 00 80 | info@smart-lux.ch