Reference: D10184

LAKE35 D10184

Depth (mm)	90
Diameter (mm)	172mm
Embedding diameter (mm)	155mm
System power (W)	43W
Luminous flow (lm)	3300lm
Voltage	200-240V AC
Degree of protection	IP54
Luminaire life (h)	50'000H
Driver lifetime (h)	50'000H
Beam angle	75°
Finishing	Black
Light source	SMD2835
IK resistance	IK06
MacAdam	6
IRC	80
Fixation	Encastré
Driver output amperage	850mA
Driver output voltage	30-40V DC
Protection class	Class II
Warranty	3 years
Color temperature	3000K
Light regulation	On-off
Operating temperature	-20℃ ~40℃
Orientation	Fixe

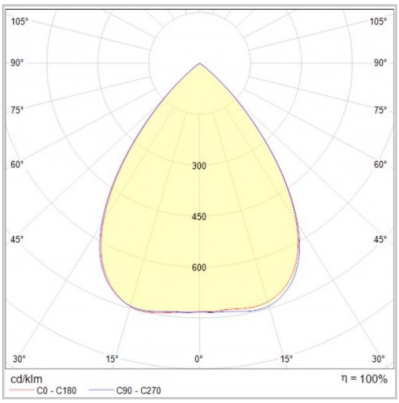

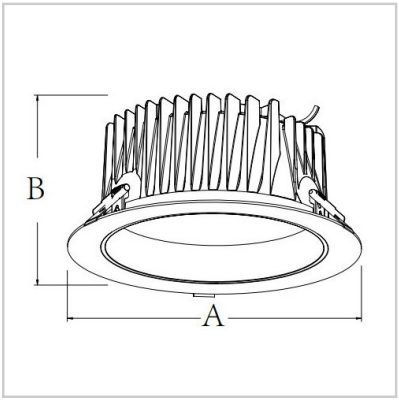

Sous réserve de modifications techniques car nos produits sont constamment améliorés.
We reserve the right to make technical changes as our products are constantly being improved.
Wir behalten uns das Recht vor, technische Änderungen vorzunehmen, da unsere Produkte ständig verbessert werden.

Smart Lux | Rue du Cardinal-Journet 25, 1217 Meyrin | +41 22 800 00 80 | info@smart-lux.ch